Micron® Accelerated All-NVMe Red Hat Ceph® Storage Solution

Taming Tomorrow's Data Growth Today: Red Hat Ceph Storage and NVMe SSDs

Private clouds, big data, real-time sensors, self-monitoring and self-reporting devices combined with an ever-changing archival requirement all add up: we are generating and capturing new data at an unprecedented rate. Virtualized environments, media streaming, cloud-based infrastructures and a more distributed workforce need continuous access to that data - at the speed of now.

Supermicro® and Micron are showcasing a pre-engineered, scalable, performance-optimized NVMe solution to better manage rapidly growing storage demands, built on standard server platforms with Micron 9100 MAX NVMe Enterprise SSDs and Advanced DRAM, this solution offers an ultra-performance, ultra-dense, all-flash Ceph storage infrastructure you can count on – today and tomorrow.

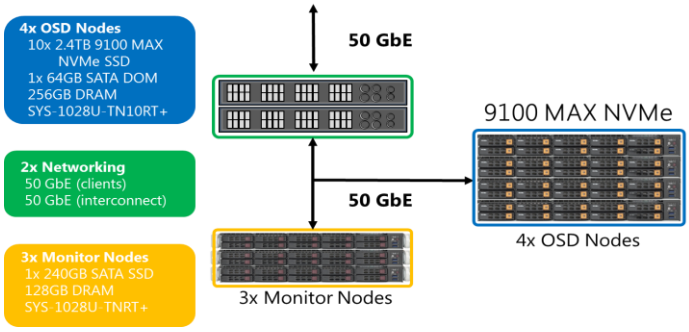

Figure 1: Red Hat Ceph Storage reference configuration on Supermicro standard servers powered by Micron 9100 MAX NVMe Enterprise SSDs and Advanced DRAM

Key Features

Precision Tuned, SSD-Optimized Red Hat Ceph® Storage Platform: Massive Scale and Performance

Ceph Storage provides an ultra-scale infrastructure — from terabytes to exabytes. Micron collaborated with Red Hat to tune Ceph Storage performance on Micron NVMe SSDs to deliver blazing speed.

This Micron Accelerated all-NVMe Red Hat Ceph Storage solution is built on a foundation of industry standard server platforms, open software and blazing fast NVMe storage - all engineered to optimize compute, networking and storage into a highly scalable platform, delivering a 4-node building block that can be used to scale up a high performance Ceph cluster.

Flexible Design

This Micron Accelerated all-NVMe Red Hat Ceph Storage Solution offers performance density, easy management and space efficiency making it ideal for massive scale active archives, content repositories (storage and distribution) and OpenStack cloud storage, all without compromise.

SUPERMICRO® RED HAT CEPH STORAGE Micron®

Micron® Accelerated NVMe Red Hat Ceph® Storage Solution

Ceph Storage On NVMe SSDs Enables

Versatile Deployment and Use: Building out or building new? Consolidate your storage (block and object) onto a single platform for better results and easier management.

Compelling Economics: Take the guesswork out of new projects thanks to our design expertise across core elements. Minimize acquisition and long-term expenses through precision-balanced design. Ensure consistent platform performance and durability.

How This Micron Accelerated Storage Solution Delivers

Flexibility For Multi-Role Use: Ceph Storage on Micron NVMe SSDs excels in dual-role deployments – with block and object storage performance on the same platform

High Performance, Granular Scalability : Leveraging the combined resources of Micron and Supermicro, this all NVMe Ceph Storage solution offers impressive capabilities while using very little rack space. Based on 1U building blocks, it scales granularly to better match your needs.

All-NVMe Ceph Storage Cluster: Performance:

This all-NVMe Ceph Storage cluster excels with demanding workloads (small random IO, video streaming and large sequential IO)

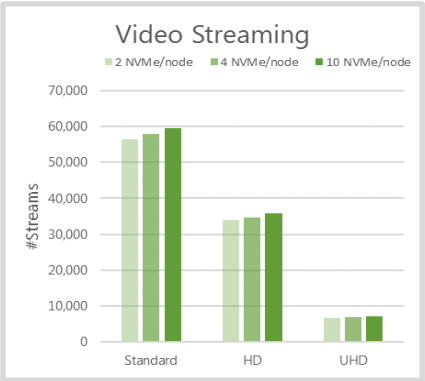

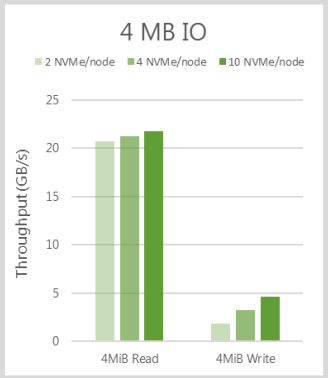

All-NVMe Ceph Storage Cluster: Configuration

Description	Vendor	Details	Qty
Storage Node (OSD)	Supermicro	SYS-1028U-TN10RT+	4
CPUs (per Node)	Intel	E5-2699V4 22C 2.2G 55M 9.6GT/s	2
DRAM	Micron	32GB 2400MHz ECC DDR4 RDIMM	8
Storage	Micron	9100 MAX 2.4TB U.2 SSD	2, 4 or 10
	Supermicro	SATA DOM 64GB	1
Networking	Mellanox	50GbE Single port	2
Monitor Node	Supermicro	SYS-1028U-TNRT+	3
CPU (per Node)	Intel	E5-2690V4 14C 2.4G 40M 9.6GT/s	2
DRAM	Micron	32GB 2400MHz ECC DDR4 RDIMM	4
Storage	Micron	Enterprise SATA 240GB SSD	1
Networking	Mellanox	50GbE single port	2

Learn More

Micron's Accelerated Solutions
Micron's NVMe SSDs
RHCS on SuperMicro Servers Perf & Sizing Guide

micron.com

*No hardware, software or system can provide absolute security under all conditions. Micron assumes no liability for lost, stolen or corrupted data arising from the use of any Micron products, including those products that incorporate any of the mentioned security features. Products are warranted only to meet Micron's production data sheet specifications. Products, programs and specifications are subject to change without notice. Dates are estimates only. ©2017 Micron Technology, Inc. All rights reserved. All information is provided on an "AS IS" basis without warranties of any kind. Micron and the Micron logo are trademarks of Micron Technology, Inc. Supermicro and the Supermicro logo are trademarks of Super Micro Computer, Inc. All other trademarks are the property of their respective owners. Copyright © 2016 Red Hat, Inc. Red Hat, Red Hat Enterprise Linux, the Shadowman logo, and JBoss are trademarks of Red Hat, Inc., registered in the U.S. and other countries. Linux ® is the registered trademark of Linus Torvalds in the U.S. and other countries. Rev. 5/17